TECHNICAL DATASHEET

AFLD10BK/CCT

10W Carbon Black IP65 CCT Selectable Floodlight With Q-Nex Plug And Play Technology

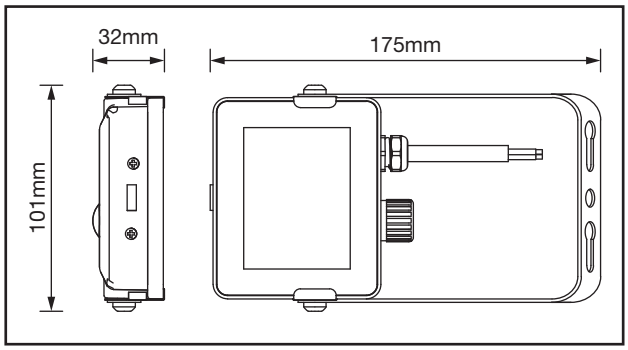

PRODUCT FEATURES

- Q-Nex Plug & Play Technology PIR Or Photocell Sensor Accessories*
- IP65 Rated
- CCT Selectable (3000K/4000K/6000K)
- 1m Pre-Wired Tough Rubber Cable
- Easy-Install Angled Bracket
- Prismatic Toughened Glass
- Slimline Diecast Carbon Black Aluminium Body

Scan For Instructions

TECHNICAL SPECIFICATIONS

Code	AFLD10BK/CCT		
Luminous Flux (LM)	886lm	971lm	962lm
Useful Luminous Flux (LM)	834lm	914lm	906lm
CCT (Kelvin)	3000K	4000K	6000K
Beam Angle (°)		110°	
SDCM		<6	
CRI		>80	
Peak Intensity (cd)	445cd	483cd	474cd
Operating Voltage (V)		220-240V AC	
Max Output Power (W)		10W	
Operating Current (A Max)		0.068A	
Standby Power (W)		<0.5W	
Power Factor (Pf)		0.66	
Class		I	
Body Material		Aluminium	
Frame Colour		Carbon Black	
Switching Cycles		30,000	
Ingress Protection		IP65	
Ambient Operating Temperature (°C)		-20°C ~ +45°C	
Input Frequency (Hz)		50-60Hz	
Guarantee		3 Years	
Cable Length		1m	
Lifetime (L70 B50)		30,000 Hrs	
Survival Factor		0.9	
Lumen Maintenance Factor		0.1	
Flicker Metric (PstLM)		<1	

ACCESSORIES*

PIR Sensor
AFL/PIR/BK

Photocell Sensor
AFL/PCELL/BK

CCT SELECTABLE | 3 YEAR GUARANTEE | 10W | IP65 | ≤971lm | USEFUL ≤914lm | 110° | 1M PREWIRED CABLE | 240V AC | CLASS 1

*Sold Separately