TECHNICAL DATASHEET

ABAR/XT6FT/CCT

6ft Twin/Single 64W High Lumen
IP66 IK10 CCT & Wattage Selectable
Anti-Corrosive LED Batten

Barracuda EXTREME

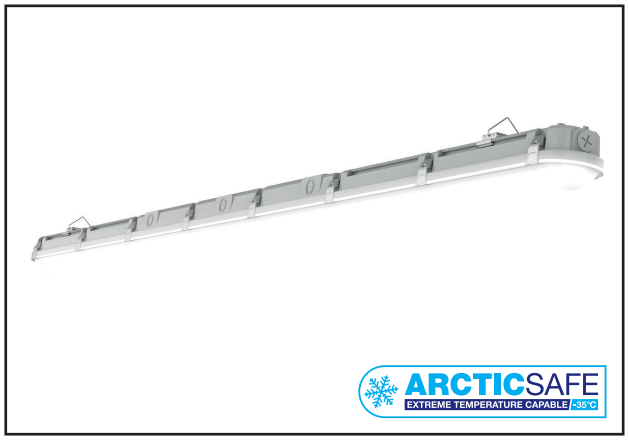

PRODUCT FEATURES

- Featuring Q-Nex Plug & Play Technology
- Plug & Play Self Testing Emergency Module Available (ABAR/EM/ST)*
- Plug & Play 2-In-1 Fully Programmable Microwave On/Off And Corridor Function Sensor Module Available (ABAR/MS2IN1)*
- CCT Selectable (3000K / 4000K / 6500K)
- Wattage Selectable (33W / 44W / 55W / 64W)
- Ultra High Efficiency & High Lumen ≤160lm/W
- IP66, IK10 Rating
- Dynamically Located Push Terminals
- Integrated Besa Mounts
- 5 Year Guarantee
- Drop Down LED Module And Gear Tray For Easy Access
- Suspension Kit Available*

Scan For Instructions

Q-Nex™ PLUG & PLAY TECHNOLOGY

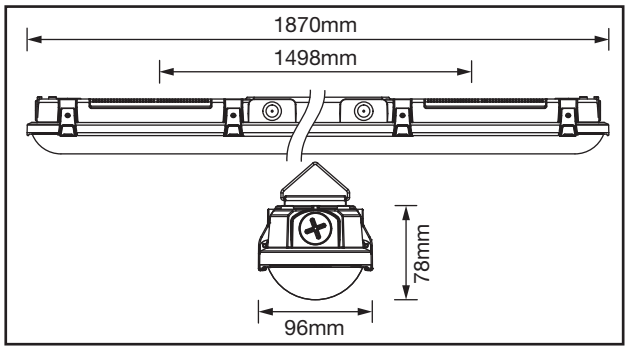

TECHNICAL SPECIFICATIONS

Code	ABAR/XT6FT/CCT											
Operating Output Power (W)	64W			55W			44W			33W		
CCT	3000K	4000K	6500K	3000K	4000K	6500K	3000K	4000K	6500K	3000K	4000K	6500K
Luminous Flux (LM)	≤9000	≤10100	≤9900	≤7800	≤8600	≤8500	≤6500	≤7000	≤7100	≤5000	≤5300	≤5400
Useful Luminous Flux (LM)	≤9000	≤10100	≤9900	≤7800	≤8600	≤8500	≤6500	≤7000	≤7100	≤4500	≤4750	≤4800
Lumen Per Watt (lm/W)	≤157lm/W			≤156lm/W			≤159lm/W			≤160lm/W		
Beam Angle (°)	110°			110°			110°			110°		
SDCM	<6			<6			<6			<6		
CRI	>80			>80			>80			>80		
Peak Intensity (cd)	2878cd	3193cd	3106cd	2485cd	2724cd	2679cd	2064cd	2224cd	2220cd	1590cd	1692cd	1718cd
Operating Voltage (V)	220-240V AC			220-240V AC			220-240V AC			220-240V AC		
Operating Current (A max)	0.43A			0.43A			0.43A			0.43A		
Efficiency %	94%			94%			94%			94%		
Standby Power (W)	<0.5W			<0.5W			<0.5W			<0.5W		
Power Factor (Pf)	0.9			0.9			0.9			0.9		
Class	I			I			I			I		
Body Material	Polycarbonate			Polycarbonate			Polycarbonate			Polycarbonate		
Frame Colour	Grey			Grey			Grey			Grey		
Switching Cycles	25,000			25,000			25,000			25,000		
Ingress Protection	IP66			IP66			IP66			IP66		
Impact Resistance	IK10			IK10			IK10			IK10		
Ambient Operating Temperature (°C)	-35°C~+40°C			-35°C~+40°C			-35°C~+40°C			-35°C~+40°C		
Input Frequency (Hz)	50/60Hz			50/60Hz			50/60Hz			50/60Hz		
Guarantee	5 Years			5 Years			5 Years			5 Years		
Lifetime (L70 B50)	55,000 Hrs			55,000 Hrs			55,000 Hrs			55,000 Hrs		
Flicker Metric (PstLM)	<1			<1			<1			<1		
Stroboscopic Effect Metric (SVM)	<0.4			<0.4			<0.4			<0.4		

ACCESSORIES*

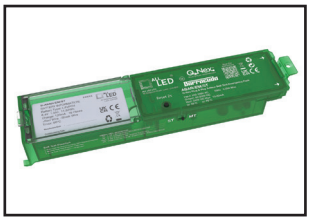

Q-Nex PLUG & PLAY TECHNOLOGY

Self Testing Emergency Module
ABAR/EM/ST

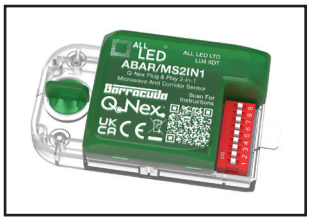

Q-Nex PLUG & PLAY TECHNOLOGY

2-In-1 Fully Programmable Microwave On/Off And Corridor Function Sensor Module
ABAR/MS2IN1

5 YEAR GUARANTEE | CCT SELECTABLE | 64W | ≤10100lm | 220-240VAC | IK10 | IP66 | COASTAL | NON-DIM | 110° | 55,000H | SMD LED | CLASS 1

*Sold Separately