TECHNICAL DATASHEET

ABAR/XT5FT/CCT

5ft Twin/Single 55W High Lumen
IP66 IK10 CCT & Wattage Selectable
Anti-Corrosive LED Batten

Barracuda EXTREME

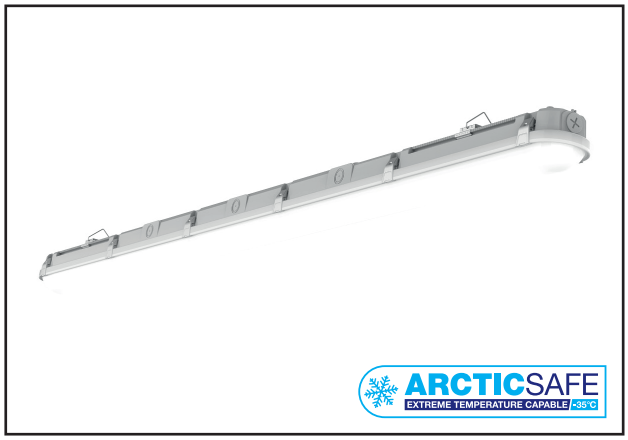

PRODUCT FEATURES

- Featuring Q-Nex Plug & Play Technology
- Plug & Play Self Testing Emergency Module Available (ABAR/EM/ST)*
- Plug & Play 2-In-1 Fully Programmable Microwave On/Off And Corridor Function Sensor Module Available (ABAR/MS2IN1)*
- CCT Selectable (3000K / 4000K / 6500K)
- Wattage Selectable (29W / 38W / 47W / 55W)
- Ultra High Efficiency & High Lumen ≤163lm/W
- IP66, IK10 Rating
- Dynamically Located Push Terminals
- Integrated Besa Mounts
- 5 Year Guarantee
- Drop Down LED Module And Gear Tray For Easy Access
- Suspension Kit Available*

Scan For Instructions

Q-Nex™ PLUG & PLAY TECHNOLOGY

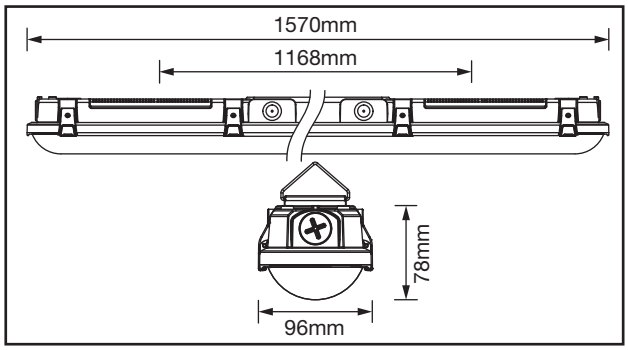

TECHNICAL SPECIFICATIONS

Code	ABAR/XT5FT/CCT											
Operating Output Power (W)	55W			47W			38W			29W		
CCT	3000K	4000K	6500K	3000K	4000K	6500K	3000K	4000K	6500K	3000K	4000K	6500K
Luminous Flux (LM)	≤8000	≤8750	≤8500	≤7000	≤7600	≤7500	≤5800	≤6200	≤6100	≤4500	≤4750	≤4800
Useful Luminous Flux (LM)	≤8000	≤8750	≤8500	≤7000	≤7600	≤7500	≤5800	≤6200	≤6100	≤4500	≤4750	≤4800
Lumen Per Watt (lm/W)	≤159lm/W			≤161lm/W			≤163lm/W			≤163lm/W		
Beam Angle (°)	110°			110°			110°			110°		
SDCM	<6			<6			<6			<6		
CRI	>80			>80			>80			>80		
Peak Intensity (cd)	2531cd	2759cd	2659cd	2211cd	2399cd	2343cd	1818cd	1943cd	1926cd	1418cd	1495cd	1502cd
Operating Voltage (V)	220-240V AC			220-240V AC			220-240V AC			220-240V AC		
Operating Current (A max)	0.36A			0.36A			0.36A			0.36A		
Efficiency %	95%			95%			95%			95%		
Standby Power (W)	<0.5W			<0.5W			<0.5W			<0.5W		
Power Factor (Pf)	0.9			0.9			0.9			0.9		
Class	I			I			I			I		
Body Material	Polycarbonate			Polycarbonate			Polycarbonate			Polycarbonate		
Frame Colour	Grey			Grey			Grey			Grey		
Switching Cycles	25,000			25,000			25,000			25,000		
Ingress Protection	IP66			IP66			IP66			IP66		
Impact Resistance	IK10			IK10			IK10			IK10		
Ambient Operating Temperature (°C)	-35°C~+40°C			-35°C~+40°C			-35°C~+40°C			-35°C~+40°C		
Input Frequency (Hz)	50/60Hz			50/60Hz			50/60Hz			50/60Hz		
Guarantee	5 Years			5 Years			5 Years			5 Years		
Lifetime (L70 B50)	55,000 Hrs			55,000 Hrs			55,000 Hrs			55,000 Hrs		
Flicker Metric (PstLM)	<1			<1			<1			<1		
Stroboscopic Effect Metric (SVM)	<0.4			<0.4			<0.4			<0.4		

ACCESSORIES*

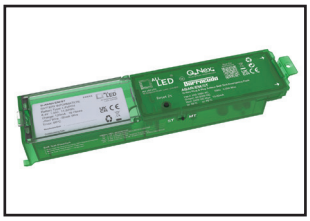

Q-Nex PLUG & PLAY TECHNOLOGY

Self Testing Emergency Module
ABAR/EM/ST

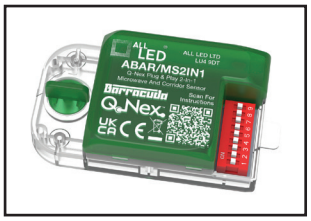

Q-Nex PLUG & PLAY TECHNOLOGY

2-In-1 Fully Programmable Microwave On/Off And Corridor Function Sensor Module
ABAR/MS2IN1

5 YEAR GUARANTEE | CCT SELECTABLE | 55W | ≤8750lm | 220-240VAC | IK10 | IP66 | COASTAL | NON-DIM | 110° | 55,000H | SMD LED | CLASS 1

*Sold Separately