TECHNICAL DATASHEET

ABAR/4FT/CCT

4ft Twin/Single 33W High Lumen IP20
CCT & Wattage Selectable LED Batten

Barracuda™

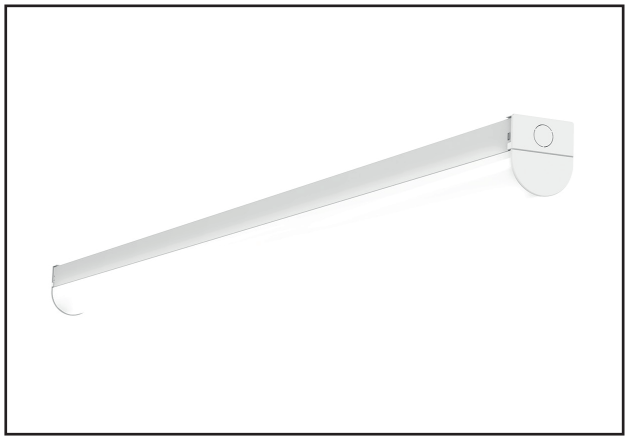

PRODUCT FEATURES

- Featuring Q-Nex Plug & Play Technology
- Plug & Play Self Testing Emergency Module Available (ABAR/EM/ST)*
- Plug & Play 2-In-1 Fully Programmable Microwave On/Off And Corridor Function Sensor Module Available (ABAR/MS2IN1)*
- CCT Selectable (3000K / 4000K / 6500K)
- Wattage Selectable (18W / 23W / 28W / 33W)
- Drop Down Geartray For Easy Installation
- Ultra High Efficiency & High Lumen ≤147lm/W
- Dynamically Located Push Terminals
- Integrated Besa Mounts
- Multiple Cable Entry Holes
- 5 Year Guarantee
- Suspension Kit Available*

Scan For Instructions

Q-Nex™ PLUG & PLAY TECHNOLOGY

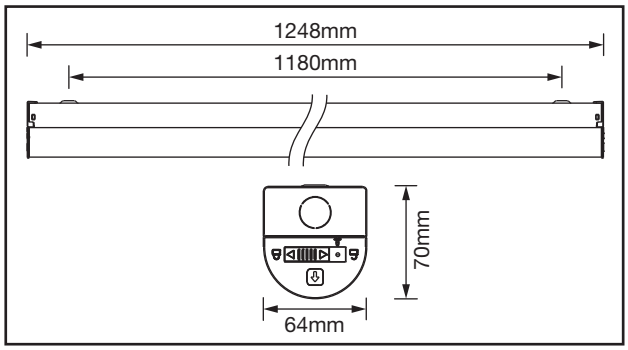

TECHNICAL SPECIFICATIONS

Code	ABAR/4FT/CCT											
Operating Output Power (W)	33W			28W			23W			18W		
CCT	3000K	4000K	6500K	3000K	4000K	6500K	3000K	4000K	6500K	3000K	4000K	6500K
Luminous Flux (LM)	≤4500lm	≤4800lm	≤4500lm	≤3800lm	≤4000lm	≤3800lm	≤3300lm	≤3400lm	≤3300lm	≤2500lm	≤2600lm	≤2500lm
Useful Luminous Flux (LM)	≤4500lm	≤4800lm	≤4500lm	≤3800lm	≤4000lm	≤3800lm	≤3300lm	≤3400lm	≤3300lm	≤2500lm	≤2600lm	≤2500lm
Lumen Per Watt (lm/W)	≤145lm/W			≤143lm/W			≤147lm/W			≤144lm/W		
Beam Angle (°)	110°			110°			110°			110°		
SDCM	<6			<6			<6			<6		
CRI	>80			>80			>80			>80		
Peak Intensity (cd)	1277cd	1357cd	1278cd	1087cd	1140cd	1087cd	931cd	962cd	304cd	705cd	727cd	704cd
Operating Voltage (V)	220-240V AC			220-240V AC			220-240V AC			220-240V AC		
Operating Current (A max)	0.27A			0.27A			0.27A			0.27A		
Efficiency %	92%			92%			92%			92%		
Standby Power (W)	<0.5W			<0.5W			<0.5W			<0.5W		
Power Factor (Pf)	0.9			0.9			0.9			0.9		
Class	I			I			I			I		
Body Material	Steel & Polycarbonate			Steel & Polycarbonate			Steel & Polycarbonate			Steel & Polycarbonate		
Frame Colour	Polar White (RAL9003)			Polar White (RAL9003)			Polar White (RAL9003)			Polar White (RAL9003)		
Switching Cycles	25,000			25,000			25,000			25,000		
Ingress Protection	IP20			IP20			IP20			IP20		
Ambient Operating Temperature (°C)	-35°C~+40°C			-35°C~+40°C			-35°C~+40°C			-35°C~+40°C		
Input Frequency (Hz)	50/60Hz			50/60Hz			50/60Hz			50/60Hz		
Guarantee	5 Years			5 Years			5 Years			5 Years		
Lifetime (L70 B50)	55,000 Hrs			55,000 Hrs			55,000 Hrs			55,000 Hrs		
Flicker Metric (PstLM)	<1			<1			<1			<1		
Stroboscopic Effect Metric (SVM)	<0.4			<0.4			<0.4			<0.4		

ACCESSORIES*

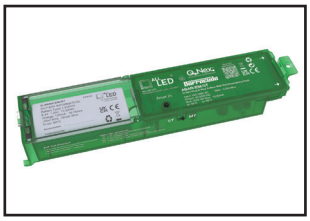

Q-Nex PLUG & PLAY TECHNOLOGY

Self Testing Emergency Module
ABAR/EM/ST

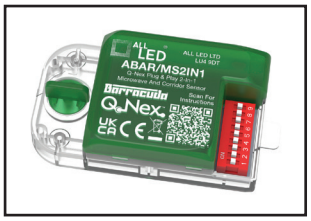

Q-Nex PLUG & PLAY TECHNOLOGY

2-In-1 Fully Programmable Microwave On/Off And Corridor Function Sensor Module
ABAR/MS2IN1

5 YEAR GUARANTEE | CCT SELECTABLE | 33W | ≤4800lm | 220-240V AC | IP20 | INDOORS ONLY | NON-DIM | 110° | 55,000H | SMD LED | CLASS 1

*Sold Separately