Aurora LED Controllers may be fitted in the same circuit as inductive loads as they feature 1.0KV Surge protection in accordance with EN61547
EMC compliance – EN 55015, EN 61000, EN 61547
Safety compliance – EN 61347
1W 350mA Constant Current LED's can be dimmed with the AU-LEDD16CC Driver

Environmental Protection (W.E.E.E.) – Aurora's WEEE Reg.No. WEE/BG0130YX

Waste Electrical & Electronic Equipment Regulations (WEEE) requires that any of our products showing this marking (left) must not be disposed of with other household or commercial waste. Aurora does not levy any WEEE disposal charges to its customers for affected WEEE related products. To prevent possible harm to the environment or human health from uncontrolled waste disposal, please separate any such product from other waste types and recycle it responsibly at your local facilities. Check with your Local Authority, Recycling Centre or retailer for recycling advice. If, when you purchased any Aurora product, your supplier included a WEEE disposal fee, you should then contact your supplier for advice on his takeback of the product for the correct disposal.

GENERAL

GUARANTEE

This product is guaranteed in the UK for a period of 3 years from the date of purchase. The guarantee is invalid in the case of improper use, installation or tampering. Should this product fail during the guarantee period it will be replaced free of charge, subject to correct installation and return of the faulty unit. Aurora does not accept responsibility for any installation costs associated with the replacement of this product. Your statutory rights are not affected. Aurora reserve the right to alter specifications without prior notice.

Aurora Limited 16 Alban Park Hatfield Road St Albans Hertfordshire AL4 0JJ United Kingdom
Website: www.aurora.eu.com
Document version - AU-LED_CC_V1_09.doc

AURORA INTERNATIONAL LIGHTING CORPORATION

LOW VOLTAGE CONSTANT CURRENT LED DRIVERS

LED

PLEASE READ THESE INSTRUCTIONS CAREFULLY BEFORE INSTALLATION
LEAVE A COPY FOR THE USER / MAINTENANCE ENGINEER FOR FUTURE REFERENCE

Installation should be carried out in accordance with the latest edition of the I.E.E. Wiring Regulations.
For use with Aurora **constant current** LED products.
IMPORTANT. Constant current LED Fittings **MUST be wired in SERIES** ensuring **correct polarity**. Failure to do so can cause permanent luminaire and/or driver failure.
Before commencing installation or maintenance, ensure electricity is switched off at the mains.
Keep the LED Driver away from direct sources of heat such as Low Voltage lamps.
Insure that ALL electrical connections are tight with no loose strands.
F Suitable for mounting on normally flammable surfaces.
M M Suitable for direct mounting on or in cabinets or furniture.

IMPORTANT INSTALLATION INFORMATION

Use the table below to assist with calculating how many LED fittings may be used with the constant current LED Driver. Simply multiply the number of fittings by their respective wattage up to the MAXIMUM rating of the Driver. It is possible to combine different constant current fittings.

LED Driver Cat.No.	mA rating	Dimmable	Max Wattage of LED's
AU-LED0635CC	350mA	No	6
AU-LED09T	350mA	No	9
AU-LED09IP	350mA	No	9
AU-LEDD16CC	350mA	Yes with AU-DSPLED	18

INSTALLATION INSTRUCTIONS AU-LED09IP

1. Isolate from the mains supply before installation or maintenance.

First Numeral: Complete protection against contact/ DUST TIGHT – Pressure against ingress of dust.
Second Numeral Protection Against indefinite Immersion in water under specified pressure – 2m maximum depth

2. The AU-LED09IP is IP68 rated and is therefore protected against the following :
3. The AU-LED09IP is suitable for exterior use e.g. Pond/pool lighting or anywhere requiring submersion in water
4. The mains supply should be connected to the Primary input cable using a suitable IP68 rated cable connector/junction box as follows:

Black/Blue – Neutral Red/Brown – Live

INSTALLATION INSTRUCTIONS FOR NON IP DRIVERS

1. Isolate from the mains supply before installation or maintenance.
2. The AU-LED0635CC/AU-LED09T/AU-LEDD16CC LED Drivers feature loop-in and loop-out primary wiring terminals. (see figure 1)

Black/Blue – Neutral
Red/Brown – Live
Green & Yellow – Earth.

4. Constant Current LED's must be wired in series ensuring correct polarity, see Figure 3. Failure to do so may result in permanent damage to the lamp or driver
5. The AU-LEDD16CC is dimmable when used with AU-DSPLED 1-10V Dimmer Switch. For use with 350mA 1W LED's. See Figure 4.

3. The mains supply should be connected to the Primary input terminals as follows:

Figure.1

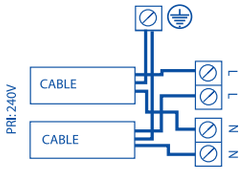

Do not fit the LED Driver above the luminaire (see figure 2)

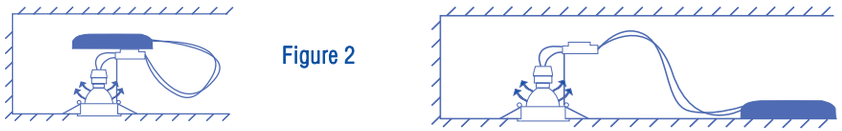

Figure 2

Incorrect Installation Correct Installation

IMPORTANT. Constant current LED fittings **MUST be wired in SERIES** ensuring **correct polarity**. Failure to do so can cause permanent lamp and/or driver failure.

Figure 3. Series wiring for Aurora 350mA constant current LED's

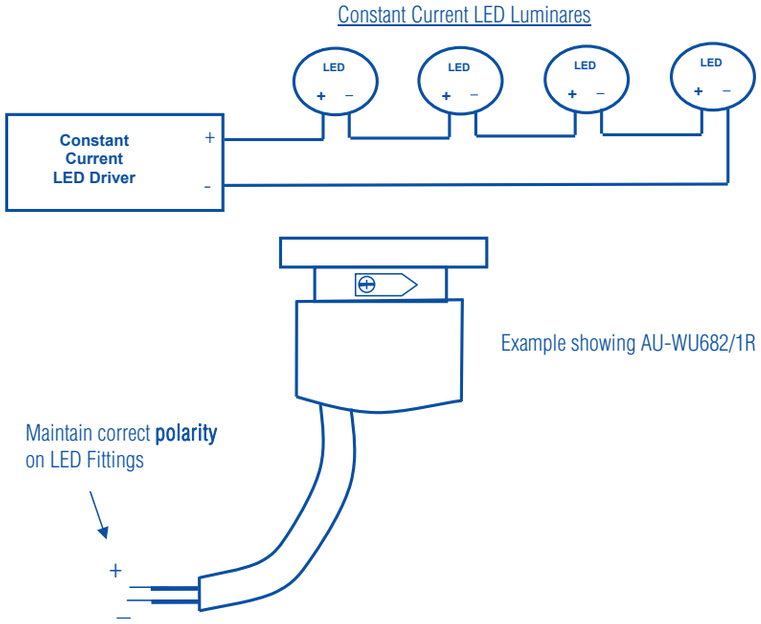
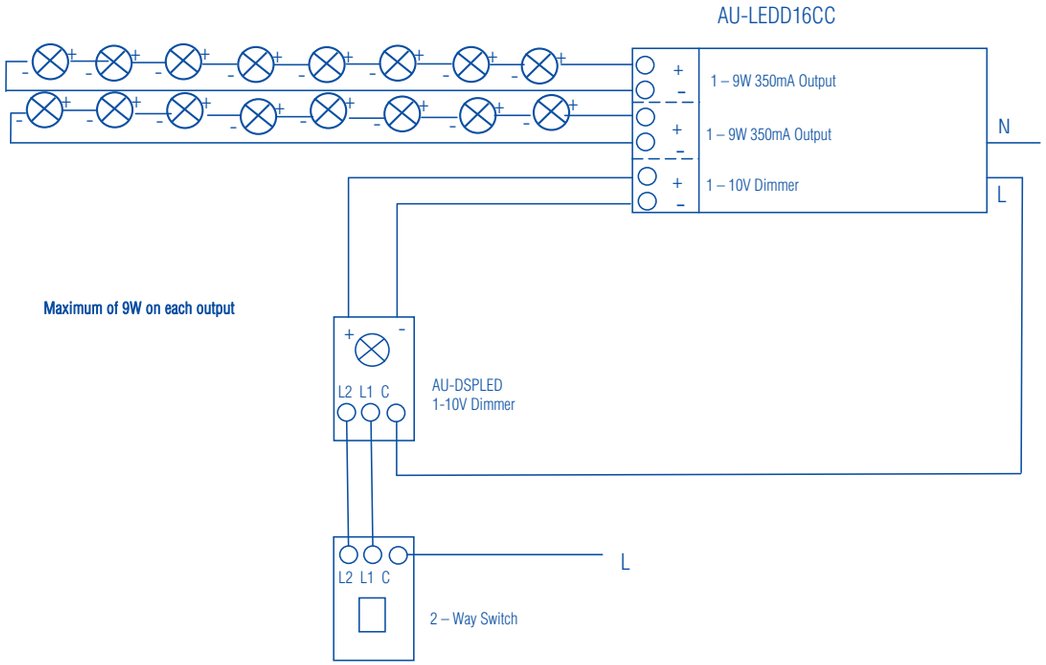
Figure 4. AU-LEDD16CC Dimmable LED Driver Example Wiring Diagram