orlight®
FROM SOURCE TO SITE

## ORL1009-F-HS - Fire Rated Fixed Magnetic Downlight

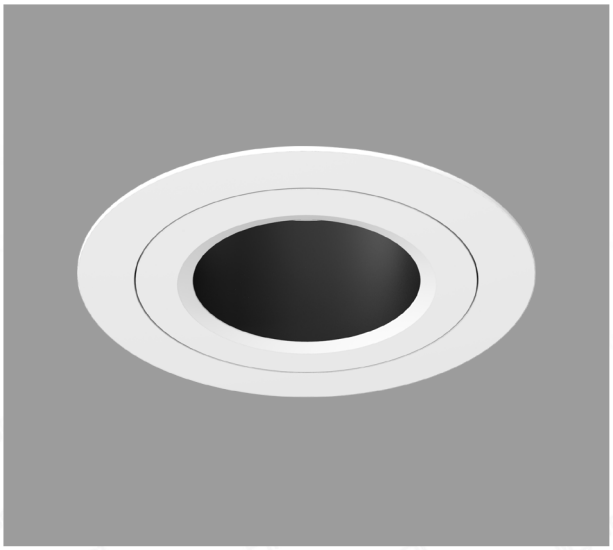

## Description

Fixed architectural downlight featuring a magnetic lamp change mechanism. The fire rated range, with its long base fixtures, can accommodate Orlight's longer length LED lamp types. Available in various finishes.

## Dimensions

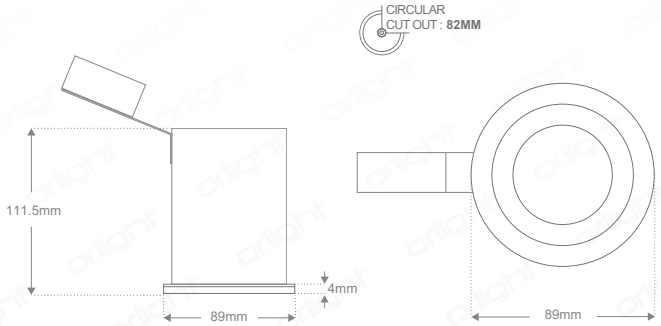


## Specifications

| | |
|---|---|
| Lamps | CR5; LUMENSTAR; MTG2PLUS |
| Construction | Aluminium / Alloy |
| Lamp Change | Magnetic Lamp Change Mechanism |
| Power Consumption | Variable Light Source |
| Voltage | Max 240V |
| Tilt | Fixed |
| Rotation | Fixed |
| Cutout | 82mm - Circular |
| Anti-Glare | No |
| IP Rating | 20 |
| Accessories | Integrated GU10 Lamp Holder |
| Finish | Solid Colours - Epoxy Powder Coat |

## Finishes

White

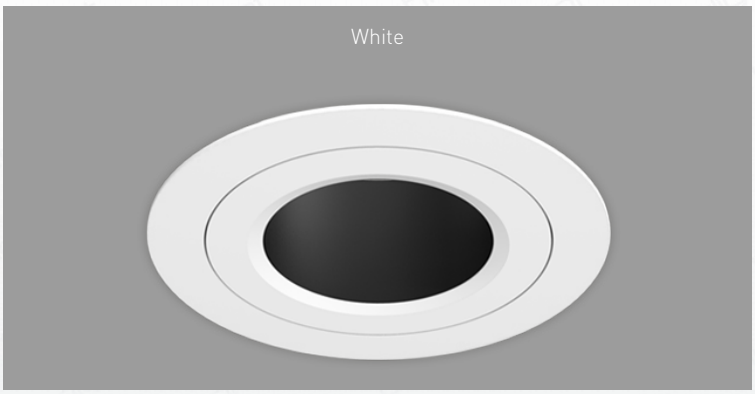

All White

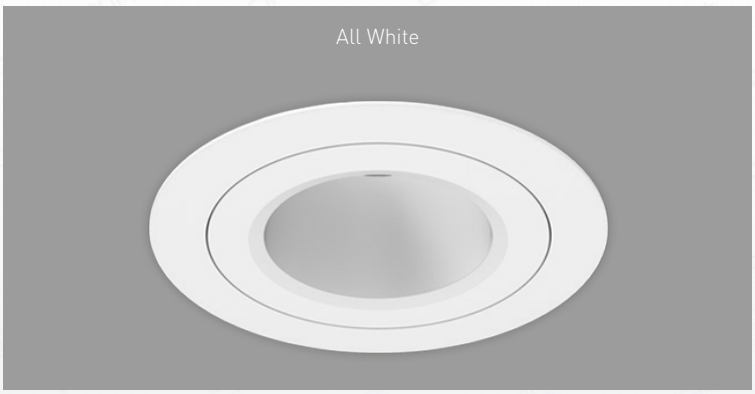

## Product Coding Example: ORL1009-F-HS-AW-9016

| CODE | FIRE RATED | HIGH SPEC | FINISH |
|---|---|---|---|
| ORL1009 | F | HS | WH - (White RAL9016) |
| | | | AW - (All White RAL9016) |