Cable and Torque Settings

Check the tightness of all terminals, including factory made terminations, as follows:

Device	Max Cable Capacity (mm2) Input / Output	Recommended Tightening Torque (Nm)
Main Switch / RCCBs	35/35	2.5
MCBs	25/25	2.5
1 Pole RCBO	25/16	In 1.2 | Out 2.5
Earth and Neutral Terminals	25/25	2.5

Operating Instructions

- In normal use all toggles should be in the upward position indicated by I or ON.
- To isolate the supply to all the circuits, switch the RED toggle on the main isolating switch (if it is a split load board), or the BLUE toggle on the main RCD to the OFF position if this is used as the Main switch.
- On a split load unit the circuits controlled by the RCD or individual RCBO, can be isolated separately by switching the BLUE toggle to OFF.

Caution: ***The circuits not controlled by the RCD will still be live.***

- To isolate the individual circuits, switch OFF the MCB or RCBO controlling that particular circuit.

Caution: ***This only isolates one circuit the remainder of the circuits are still live.***

- The RCD which controls several circuits needs to be tested periodically (approx every 3 months) to ensure safe operation.
- The test is performed by pushing the test button marked T. If the RCD trips reset as normal. If it fails to trip seek qualified advice as the unit may require attention.

Caution: ***When the RCD trips all circuits connected to it will switch off. If you have any sensitive equipments ie. Computers or electronics. Please disconnect them prior the test.***
The same test should be repeated if rcbos are used to protect any circuits.

- Should any MCB trip, reset the MCB by pushing toggle upwards. Should it trip again, the circuit may require attention. Leave the MCB in the OFF position and seek qualified advice.
- If the RCD should trip, reset the switch. If it will not reset, switch OFF all the MCBs connected to the RCD and try to switch RCD back ON. If the RCD remains ON, switch MCBs back on one at a time. If the RCD trips during this procedure the particular circuit controlled by the MCB may require attention. Leave the suspect circuit switched OFF and reset the RCD, then seek qualified advice.

Warning!

All connections, including factory-made, must be checked for the correct installation and tightness, prior to the commissioning of the electrical installation.
Electricity is dangerous if in any doubt please seek qualified advice

LIVE ELECTRICAL DISTRIBUTION UK LTD
ADD:Unit6-9 barton business park, cawdor street, Eccles, Manchester M30 0QR
Tel: 0161 8702592 Web: www.liveelectrical.co.uk
E-mail: sales@liveelectrical.co.uk

Ensure that these instructions are made available to the end user for future reference.

LIVE ELECTRICAL DISTRIBUTION UK LTD

© Product installation and operation guide

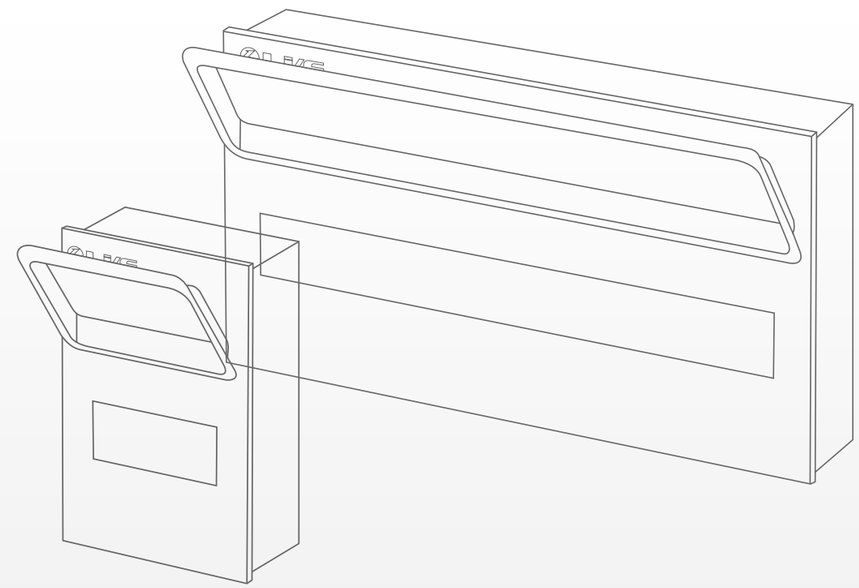

LHMC Specification

Consumer unit and enclosure
Installation and usage guide

LHMC Specification

Description

The distribution equipment and circuit protection range of metal consumer units by Live Distribution UK LTD is designed to fully comply with the requirements of BS EN 61439-3 and requirements of the 18th Edition of BS 7671 IET Wiring Regulations. With multiple configurations available, the range offers flexible versatile solutions for installations.

Features & Benefits

- Standard: BSEN61008, BS EN60898, BS EN61439-3
- Operating Voltage: 230/50Hz
- Protection Degree: IP40
- Maximum Load(A): As indicated on incoming device
- Material: manufactured from robust steel
- Fully enclosed metal construction body with drop down metal lid
- Multiple circular cable entry knock-outs (25&32mm) on the top and bottom, 40mm on the sides, and back plus larger rear slots
- Raised key holes for secure easy installation
- Raised Din rail improves cable routing
- Modern style finished in white polyester powder coating to RAL9010
- Large and accessible wiring space, with extra space for RCBOs
- Flexible connection allows for various configurations of protected ways

Unit Dimension

Part No.	Description	Dimensions		
		W	H	D
LHMC04	4 Way Metal Clad Consumer Unit Enclosure	125	252	110
LHMC06	6 Way Metal Clad Consumer Unit Enclosure	161	252	110
LHMC08	8 Way Metal Clad Consumer Unit Enclosure	197	252	110
LHMC10	10 Way Metal Clad Consumer Unit Enclosure	233	252	110
LHMC12	12 Way Metal Clad Consumer Unit Enclosure	269	252	110
LHMC14	14 Way Metal Clad Consumer Unit Enclosure	305	252	110
LHMC16	16 Way Metal Clad Consumer Unit Enclosure	341	252	110
LHMC18	18 Way Metal Clad Consumer Unit Enclosure	377	252	110
LHMC22	22 Way Metal Clad Consumer Unit Enclosure	449	252	110
LHMC24	24 Way Metal Clad Consumer Unit Enclosure	279	465	110
LHMC28	28 Way Metal Clad Consumer Unit Enclosure	305	465	110
LHMC36	36 Way Metal Clad Consumer Unit Enclosure	377	465	110

Outine Dimensions

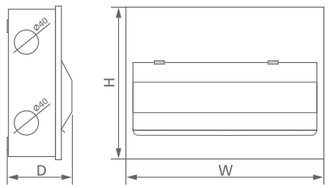

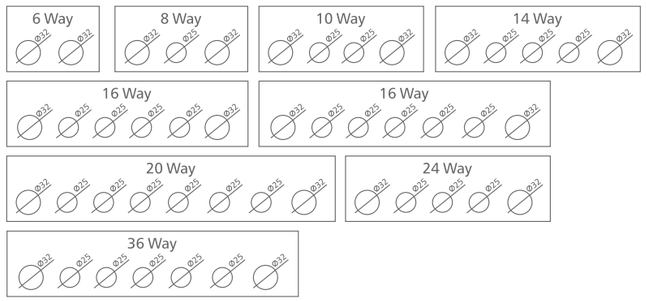

Notes:

Knockout placements are symmetrical between top and bottom / left and right sides.
Double-tier board has double the number of side knockouts.

Unit Characteristics

Rated and Operational Voltage (Un / Ue)	230V AC at 50HzR
Rated Impulse Withstand Voltage (Uimp)	4kV
Rated Current of Assembly (InA)	100A, 63A, 40A
Rated Frequency (fn)	50Hz
Degree of Protection	IP40
Mechanical Impact Protection	IK05
Note: Rated diversity factor (RDF) only applies to continuously and simultaneously loaded circuits.	

Safety Instructions

- This unit must be installed and tested in accordance with the requirements of all relevant legislation, regulations and accepted practice.
- After completion of the installation draw users attention to the instructions contained inside this booklet and leave with user.
- The total load supplied by this unit must not exceed the rating of the main switch or RCD.
- The total load of the MCBs may exceed this value where appropriate diversity is applied.
- This unit is suitable for indoor use only and is rated at IP40.
- The unit and all its components have been type tested to the following specifications:

Device	Standard
Consumer Unit	BS EN 61439-3
Main Switch	BS EN 60947-3
RCBO	BS EN 61009-1
MCB	BS EN 60898
RCD	BS EN 61008-1
SPD	BS EN 61643-11

- The MCBs fitted to this unit are calibrated at 30°C in accord with temperature calibration requirements of EN60898.
  At other temperatures the following rating factors should be used.
  60°C 0.85 20°C 1.0 0°C 1.15
- Adjacent Thermal Magnetic MCBs should not be continuously loaded or approach their nominal rated currents when mounted in Enclosures. It is recommended that a 60% diversity factor be applied to the MCBs nominal rated current where it is intended to load the MCB continuously.

Installation

Enclosure Mounting

- Remove lid by turning lid fixing screws until they are free from the base.
- Remove appropriate cable entry holes. If using compression glands, fit them in the appropriate knockout prior to fixing unit to the wall.
- Mount the unit using appropriate screws and fixings.
- Bring all cables in through appropriate cutouts and route to their final location.

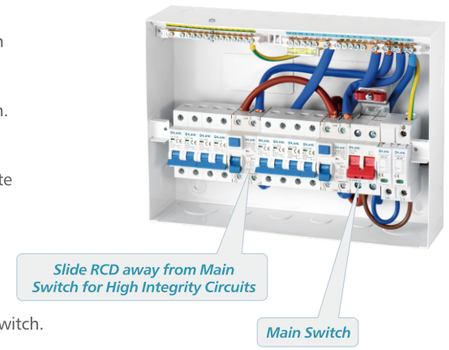

Connection of Main Incoming Device

- Cut and dress the main incoming cables and connect them into the appropriate terminals.
- Tighten the main incoming terminals securely.

MCB Connection

- Cut the busbar into the required split configuration if required.
- It is recommended that the largest rating MCBs be fitted closest to the Main Switch.
- To connect High Integrity circuits RCBOs slide RCD next to Main Switch away from Main Switch and fit RCBOs and busbar.
- Tighten terminal screw onto busbar to recommended torque of 2.0Nm and fit Terminal cover.
- Cut and dress circuit conductors and connect them to the appropriate MCB,
- RCBO and corresponding Earth and Neutral terminals. Recommended torque 2.0Nm.

Installation of Control Devices

- Control devices such as Timers Modular, Contactors and Transformers can be fitted to this unit. The incoming supply for the device should be fed from an MCB and not direct from the busbar.

Completion of Installation

- Test installation in accordance with relevant regulations.
- Fit any Blanking plates that are required on the front cover.
- Once all circuits are connected, replace lid.
- Labels are provided and should be used as required.
- Once the above is complete hand this booklet to the end user.